National Technics

# FM/AM STEREO RECEIVER

# SA-5370

# SA-5370K

## OPERATING INSTRUCTIONS

* SA-5370K is differnt * in appearance and colour-tone.
* Cabinet colour and configuration of ventilation holes differ according to area.

Before operating this unit, please read these instructions completely

# CONTENTS

BEFORE USING THIS UNIT ..... 2
FOR UNITED KINGDOM ..... 2
APPLIANCES CONNECTABLE TO THIS UNIT ..... 2
CONTROLS AND THEIR FUNCTIONS ..... 3
CONNECTIONS AND OPERATION ..... 5
OPERATION CAUTIONS ..... 9
HOW TO USE PIN PLUGS ..... 10
HOW TO CARE FOR THE CABINET ..... 10
ACCESSORIES ..... 10
FOR LONGER AND SAFER USE OF THIS UNIT ..... 10
TECHNICAL SPECIFICATIONS ..... 12

*Dear Stereo Fan*

We want to thank you for selecting this product and to welcome you to the growing family of satisfied Technics product owners around the world.
We feel certain you will get maximum enjoyment from this new addition to your home.
Please read these operating instructions carefully, and be sure to keep them handy for convenient reference.

## BEFORE USING THIS UNIT

Be sure to set the voltage selector to agree with the voltage used in the region where the unit is uesd. The desired voltage can be easily selected by using an ordinary screwdriver. Never forget to always have the voltage selector set to the correct setting because, if the setting is incorrect, this unit could be ruined by using it on incorrect voltage.

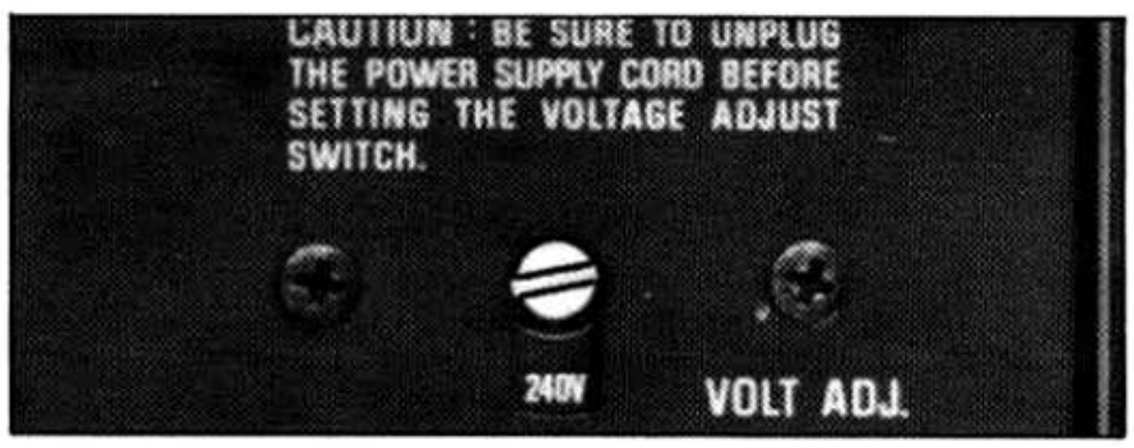


## FOR UNITED KINGDOM

**■ Important**

THE WIRES IN THIS MAINS LEAD ARE COLOURED IN ACCORDANCE WITH THE FOLLOWING CODE.

| | |
|---|---|
| BLUE | NEUTRAL |
| BROWN | LIVE |

As the colours of the wires in the mains lead of this apparatus may not correspond with the coloured markings identifying the terminals in your plug, proceed as follows.
The wire which is coloured BLUE must be connected to the terminal which is marked with the letter N or coloured BLACK.
The wire which is coloured BROWN must be connected to the terminal which is marked with the letter L or coloured RED.

## APPLIANCES CONNECTABLE TO THIS UNIT

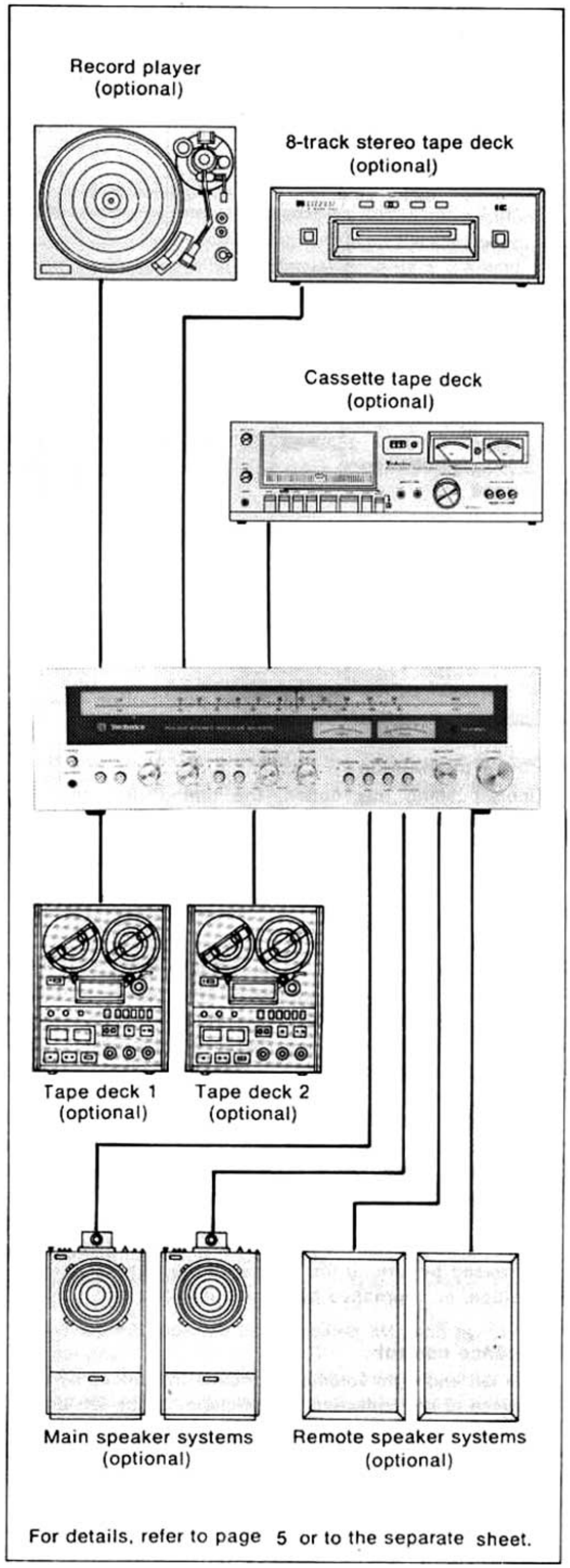


For details, refer to page 5 or to the separate sheet.

# CONTROLS AND THEIR FUNCTIONS

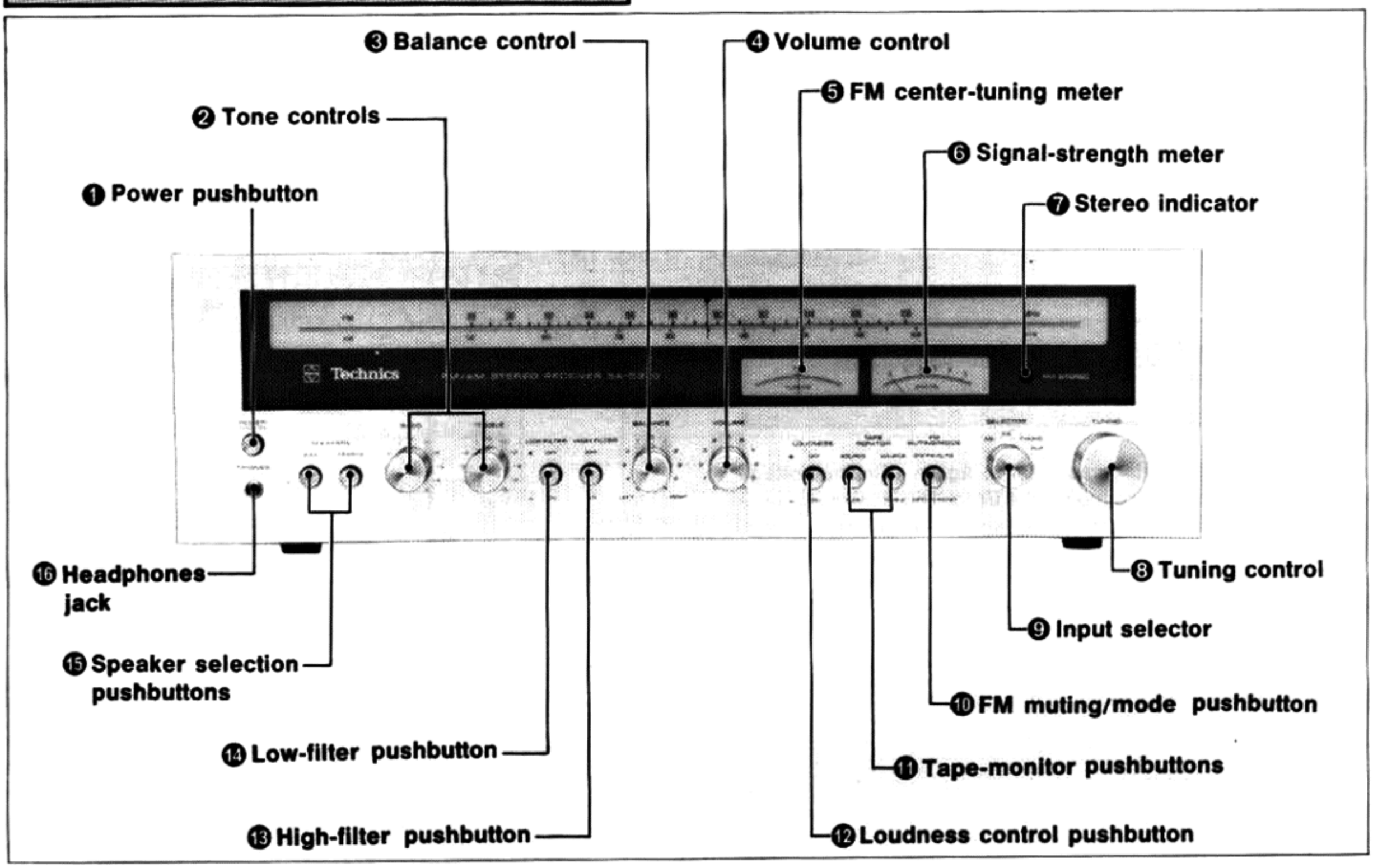


### ❶ Power pushbutton

Upon pushing this button, the tuning dial, the signal-strength meter and the FM center-tuning meter will illuminate, indicating that the receiver is on.
To turn the receiver off, push the button again; the lights of the tuning dial, signal-strength meter and the FM center-tuning meter will go off.

### ❷ Tone controls

These controls are used to make adjustments of the tone quality which may become necessary as a result of speaker characteristics or listening room characteristics, making it possible to adjust the tonal quality to that most agreeable to the listener's preference.
The bass control is for adjustment of the tone quality of the low sound range, and the treble control is for the high sound range. The characteristics can be changed within a range of +10 dB to −10 dB for the bass at 50 Hz, and within a range of +10 dB to −10 dB for the treble at 10 kHz. The characteristics are "flat" at the "0" position, and are increased by turning the control to the right from the "0" position, or decreased by turning it to the left.

### ❸ Balance control

The left and right volume balance is influenced by the difference, if any, between the efficiency of the left and right speakers, and by the placement of the furniture in the listening room.
In addition, the left and right volume of some program sources is not well balanced. If the control is turned further to the left, beyond the "0" position, the right sound becomes lower. At the "LEFT" position (at which the control is completely turned to the left), the right sound cannot be heard at all, and only the left sound is emitted.
If the control is turned to the right, the left sound becomes lower and, at the "RIGHT" position (at which it is completely turned to the right), the left sound cannot be heard at all, and only the right sound is emitted.

### ❹ Volume control

This control is for adjustment of the volume level.
Turning the control clockwise (maximum position is "10") increases the volume. Always set the volume control at "0" before turning on the unit.

### ❺ FM center-tuning meter

For FM broadcasts, tune approximately by referring to the signal-strength meter. Pinpoint the best, least distorted position with the FM center-tuning meter.
The needle of the meter is in the center if no broadcast is being received. During tuning, the needle fluctuates to the left and right. When the station is locked in, the needle returns to the center. If the tuning control is re-adjusted, the needle will fluctuate again to the left and right, and when the broadcast is completely detuned, the needle returns to the center.

### ❻ Signal-strength meter

Tune the receiver to the approximate frequency of the desired station.
Observing the signal-strength meter, tune until its indicator moves to the maximum position, which indicates the position of best tuning.

### ❼ Stereo indicator

The stereo indicator illuminates in red when the receiver is tuned to a station broadcasting in FM multiplex stereo. If the FM muting/mode pushbutton is pressed to the "OFF/FM MONO" position, the stereo indicator will not illuminate even though the broadcast is in stereo.

### ❽ Tuning control

Turn the tuning control slowly until the dial indicator indicates the desired FM or AM broadcast frequency. Always tune for the highest possible signal-strength meter reading, which indicates the optimum receiving position. This will assure clear, undistorted reception, minimum interference from adjacent stations, and maximum left-right channel separation during FM stereo broadcasts. The value of the signal-strength meter reading will depend on the signal-strength of that particular station.
When the FM center-tuning meter needle is at the center, reception is optimum. Turn the tuning control slowly to left and right until the FM center-tuning meter needle points to the center position.

### ❾ Input selector

For selection of the input sound source.

PHONO: For record player operation.

FM : Use this position to listen to radio programs on the FM broadcast band.

AM: Use this position to listen to radio programs on the AM broadcast band.

AUX: For playback of the sounds from equipment connected to the auxiliary input terminals.

**NOTE:**

If the input levels of each program source are not matched and the input selector is inadvertently switched, a large sound output may be applied to the speakers, causing damage to them.
To avoid this, make sure, when switching inputs, either that the input levels are matched, or that the volume is reduced before switching.

### ❿ FM muting/mode pushbutton

This pushbutton is used for eliminating noises between stations during FM broadcast selection and also for changing FM broadcast reception over to "stereo" or "monaural".

**ON/FM AUTO:**

Use in this position normally. In this position, unpleasant noises developed between the station peculiar to FM broadcast (inter-station noised) are eliminated, and the stereo broadcast and monaural broadcast are respectively received as "stereo" and "monaural".

**OFF/FM MONO:**

Use in this position when reception of FM broadcast is affected by frequent noises (in areas where field strength is low, for example, in mountaneous ragions or "valley" in tall buildings).
Although stereo broadcasts will be received as "monaural", the noises are reduced to a large extent.
Since the inter-station noises are not removed in this position, select the stations with the volume turned low.

### ⓫ Tape-monitor pushbuttons

When playing back from a tape deck, push the tape 1 or 2 pushbutton to the "TAPE 1" (pressed) or "TAPE 2" (pressed) position. When playing back from the source designated by the input selector, set them to the "SOURCE" (released) position.
When using a 3-head tape deck, the sound which has just been recorded can be monitored by setting the tape 1 or tape 2 pushbutton to the pressed ("TAPE 1" or "TAPE 2") position. The sound just prior to recording can be monitored by setting the pushbuttons to the "SOURCE" (released) position.
In addition, the recording condition can be checked during recording by setting the tape 1 or tape 2 pushbutton alternately to the "TAPE 1" ("TAPE 2")/"SOURCE" position.
Tape-1 pushbutton: For monitoring tape deck 1 sound.
Tape-2 pushbutton: For monitoring tape deck 2 sound.

**NOTE:**

When monitoring with the tape-1 pushbutton, be sure to set the tape-2 pushbutton to the "SOURCE" position. When monitoring with the tape-2 pushbutton, be sure to set the tape-1 pushbutton to the "SOURCE" position.
Both sources, tape deck 1 ("TAPE 1") and tape deck 2 ("TAPE 2"), cannot be played back simultaneously; the unit is designed so that tape deck 2 will have priority.

### ⓬ Loudness control pushbutton

The loudness control compensates for "thinning out" of the sound. Human ears cannot perceive the low-frequency range at low volumes, but this control compensates for this, boosting the bass as the volume decreases. Note, however, that if the volume control is set to a position higher than the "5" indication, the efficiency becomes less.

### ⓭ High-filter pushbutton

If this pushbutton is pressed to the "ON" position, treble sound which is higher than 7 kHz is decreased with a sharp curve characteristic of −6 dB/oct.
This pushbutton is especially useful if there is a great amount of record "scratch" noise, tape hiss, or if the tone quality is unsatisfactory because there is much distortion in the treble sound of the program source.

### ⓮ Low-filter pushbutton

If this pushbutton is pressed to the "ON" position, bass which is lower than 100 Hz is decreased with a sharp curve characteristic of −6 dB/oct.
This pushbutton is especially useful when there is unwanted noise in the low range because of record warp, motor rumble, poor performance by the cone of the woofer, etc.

### ⓯ Speaker selection pushbuttons

Pushbutton speaker selection system.
The speakers are selected by pushing one or both buttons, and are turned off by repushing. Only the speaker system which is switched on operates.
It is possible to operate both speaker systems by pushing both buttons.
In addition, sound reproduction can be enjoyed by using only the headphones, even when both speakers systems are switched off.

### ⓰ Headphones jack

This jack is for connection of headphones.
Use headphones with a voice-coil impedance of 4 to 16 ohms.

# CONNECTIONS AND OPERATION

**Do not plug the receiver into a power outlet until all other connections have been made. Keep the power pushbutton to the "OFF" (released) position.**

## SPEAKER CONNECTIONS AND OPERATION

This unit has two pairs of speaker terminals, marked "MAIN" and "REMOTE," making connection of two speaker systems possible. Selection of the speaker system to be used is made by pushing one, or both, of the speaker selection pushbuttons on the front panel, thereby activating either the main or remote speaker system, or both speaker systems at the same time.

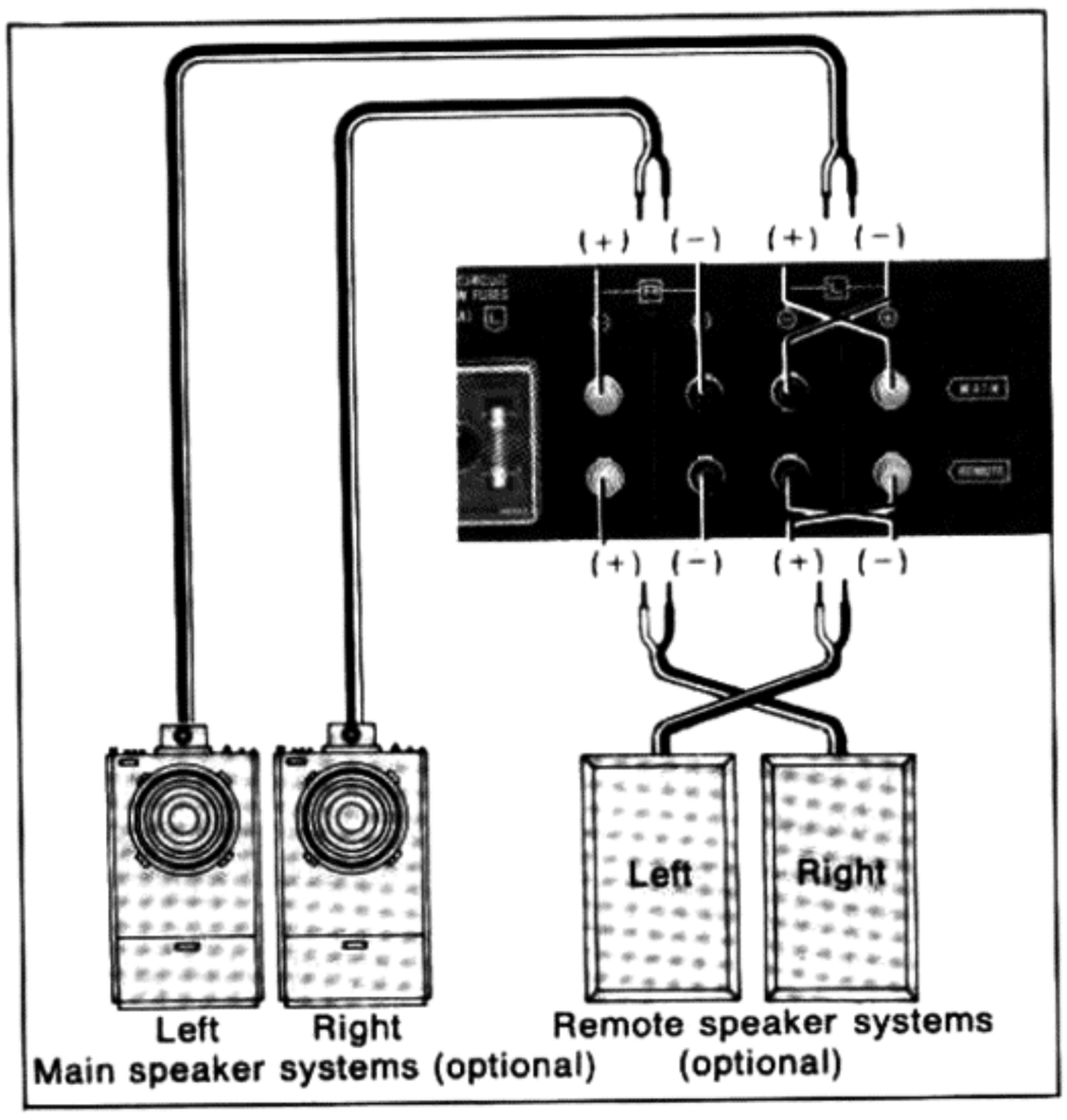


### ■ Impedance of speakers

Use speakers with a voice coil impedance of 4~16Ω with this unit.
If, however, the main and the remote speaker systems are both used at the same time, speakers of 4-ohm impedance cannot be used. Use speakers with an impedance of 8~16Ω.

### ■ Speaker connection wire

Use medium gauge wire, such as AC power cord, for speaker connections so as not to decrease the damping factor.

### ■ Connections

| | |
|---|---|
| 1 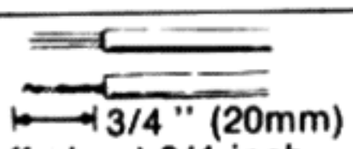  Strip off about 3/4 inch (20mm) of the connection insulation and twist the strands together. | 2 Turn the screw three or four times counterclockwise. |
| 3 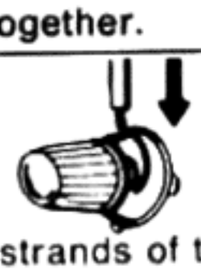 Form the strands of the core wire into a hook shape and connect to the terminal. | 4 Tighten the screw snugly clockwise. The connection is then finished. |

### ■ Speaker placement

In general, it is advisable to place the speakers on a hard wall surface. Soft surfaces can often ruin the deep tones of the bass.
Also avoid placing the speakers facing a solid surface because an echo effect may result and distort the quality of the reproduced sound.
In summary, place the speakers on a very hard surface, and, if a hard surface such as a window or panels faces the speakers, cover it with soft material such as curtains.

**NOTE:**
**Be extremely careful that the terminals or speaker wires do not "short" each other out. Never use the minus speaker terminal for ground connections.**

## CONNECTION AND USE OF AN FM ANTENNA

To assure finest reception quality of FM broadcasts, it is necessary to use an antenna which is appropriate to the reception conditions in your area. Select the optimum antenna after referring to the information given below.

### ■ A place near the broadcasting station where signals are strong (within sight of the broadcasting station transmission antenna)

If this unit is used in a place which is near the broadcasting station and the signals are quite powerful enough, or in a place such as the outskirts of a city where interference noise is relatively slight, the feeder antenna which is included with this unit may be used to obtain a certain degree of reception, although, in order to obtain the best reception of which this unit is capable, it is recommended that a special outside antenna exclusively for reception of FM broadcasts, consisting of 3 to 5 elements, should be installed.

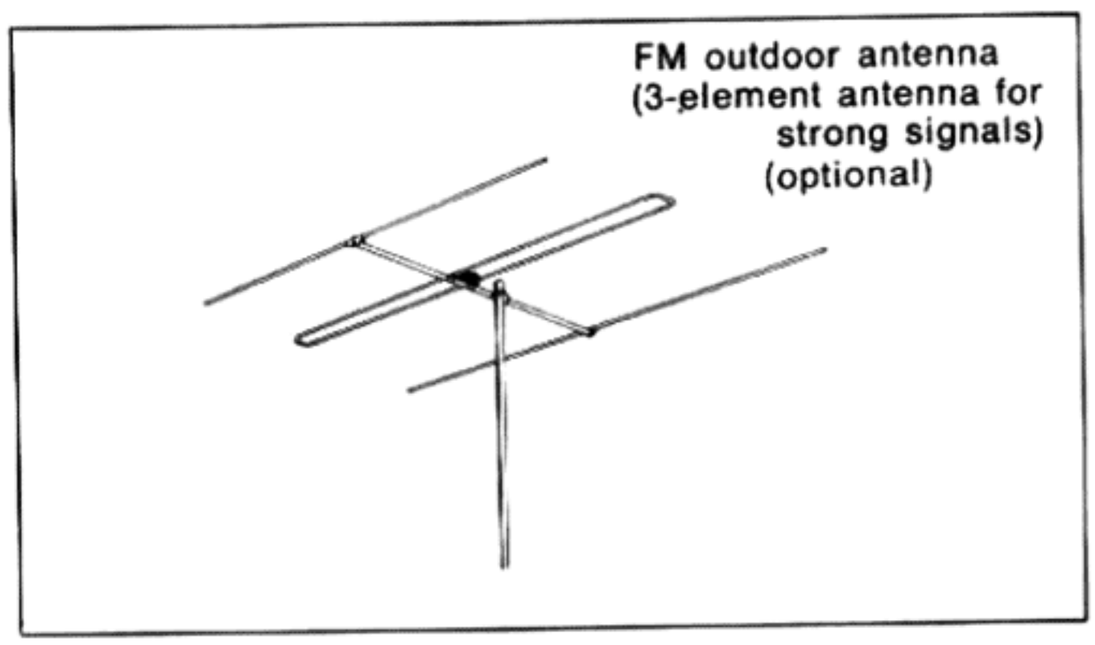


### ■ Feeder antenna

The feeder antenna which is included with this unit is provided so that you can use it to receive FM broadcasts temporarily until a special antenna exclusively for reception of FM broadcasts can be installed.
As shown in the illustration, connect this feeder antenna to the connection terminals of this unit marked "300Ω BALANCED" and, with both horizontal ends extended as shown, rotate the feeder antenna to the left and right and up and down while listening to an FM broadcast in order to determine the position of best reception. When this position has been determined, install the feeder antenna so that it remains in that position.

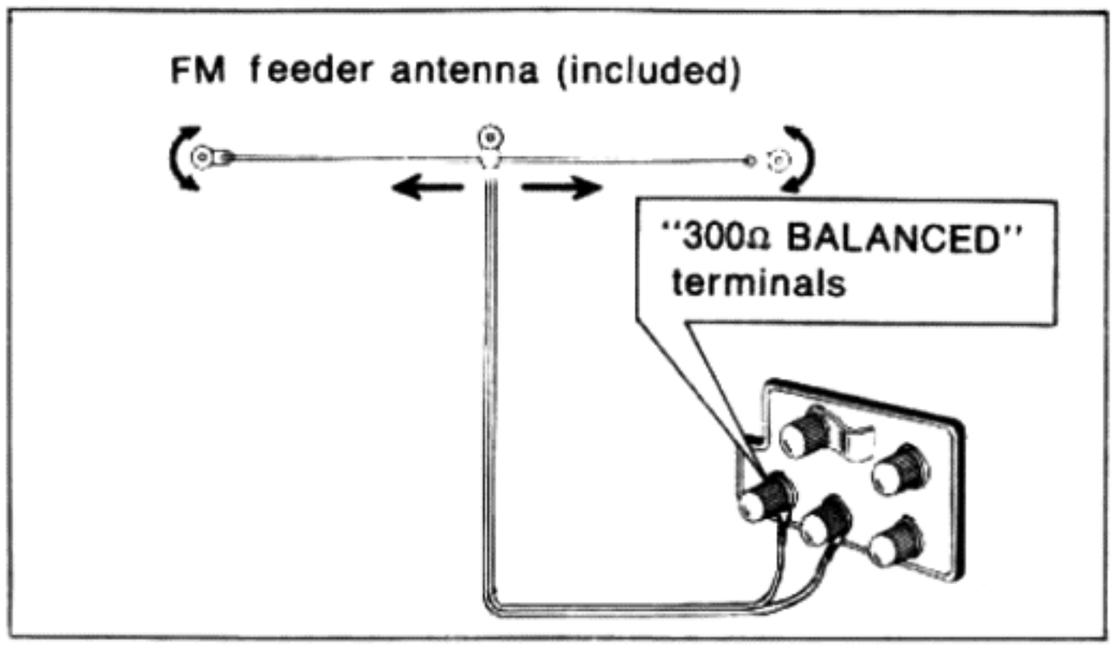


## ■ A place far from the broadcasting station where signals are weak and reception is difficult (such as near mountains or similar obstacles)

In such a location as described above, an FM antenna consisting of 5 elements or more should be installed. In general, the more elements which the antenna has, the better will be its directional characteristics. It is suggested, therefore, that the weaker the signal reception in your area, the more elements the antenna should have in order to obtain good reception.

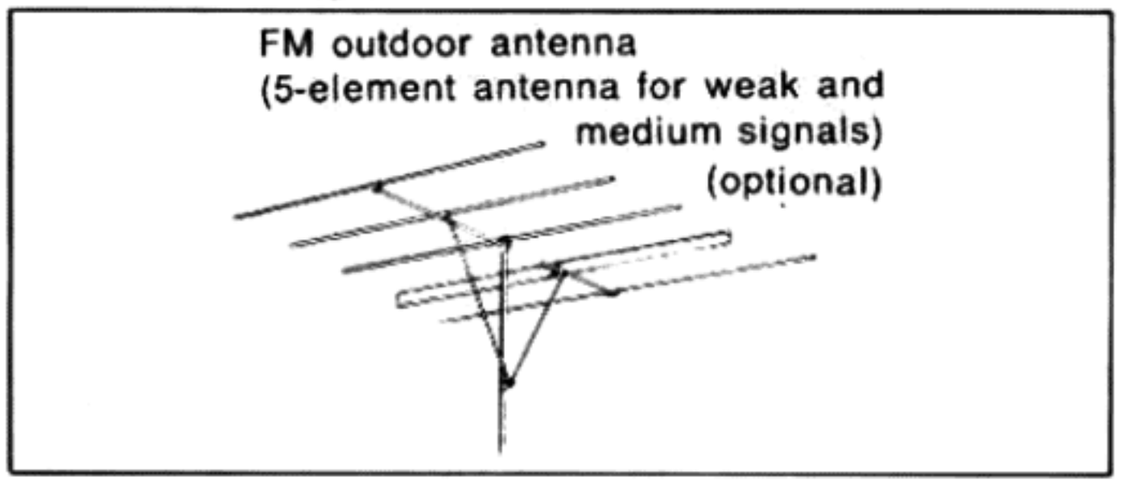


## ■ Connection between the antenna and the receiver

The connection wire which is used between the antenna and the antenna input terminals of the receiver is usually a 300-ohm parallel feeder wire or a 75-ohm coaxial cable. In comparison to feeder wire, a coaxial cable is more resistant to external interference, and also prevents fluctuations of the signal level which might be caused by environmental weather conditions.

In order to obtain the finest performance from this unit, it is recommended that coaxial cable be used rather than feeder wire. Use coaxial cable of the type 5C-2V or 3C-2V.

## ■ Connection to the FM antenna terminals of this unit

This unit includes two pairs of FM antenna input terminals: one pair of the 300-ohm type and one pair of the 75-ohm type. For this reason, connections can be made by using either a 300-ohm parallel feeder wire or a 75-ohm coaxial cable.

### ● If connections are made to the "300Ω BALANCED" terminals

Connections can be made, as shown in figure , by using 300-ohm parallel feeder wire. When this connection is made, the wire between this unit and the antenna should be as short as possible.

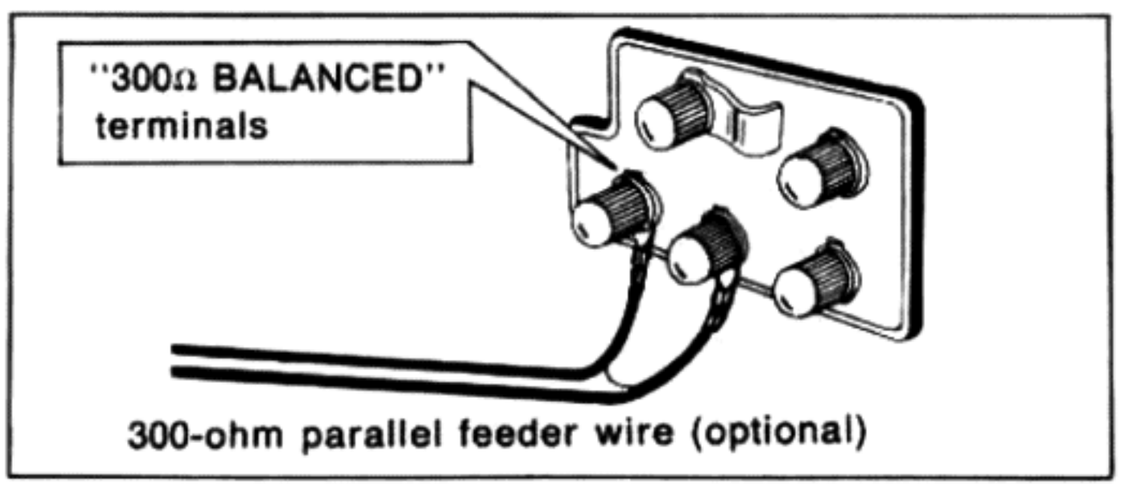


### ● If connections are made to the "75Ω" terminals

These connections should be made by using 75-ohm coaxial cable from the "75Ω" terminals of this unit, and by using a matching transformer between the antenna and this unit in order to match the impedance of the antenna to that of this unit.

A 300-ohm parallel feeder wire should be used to connect the matching transformer to the antenna, and the 75-ohm coaxial cable should be used to connect the matching transformer to the receiver. The matching transformer should be installed as near to the antenna as possible.

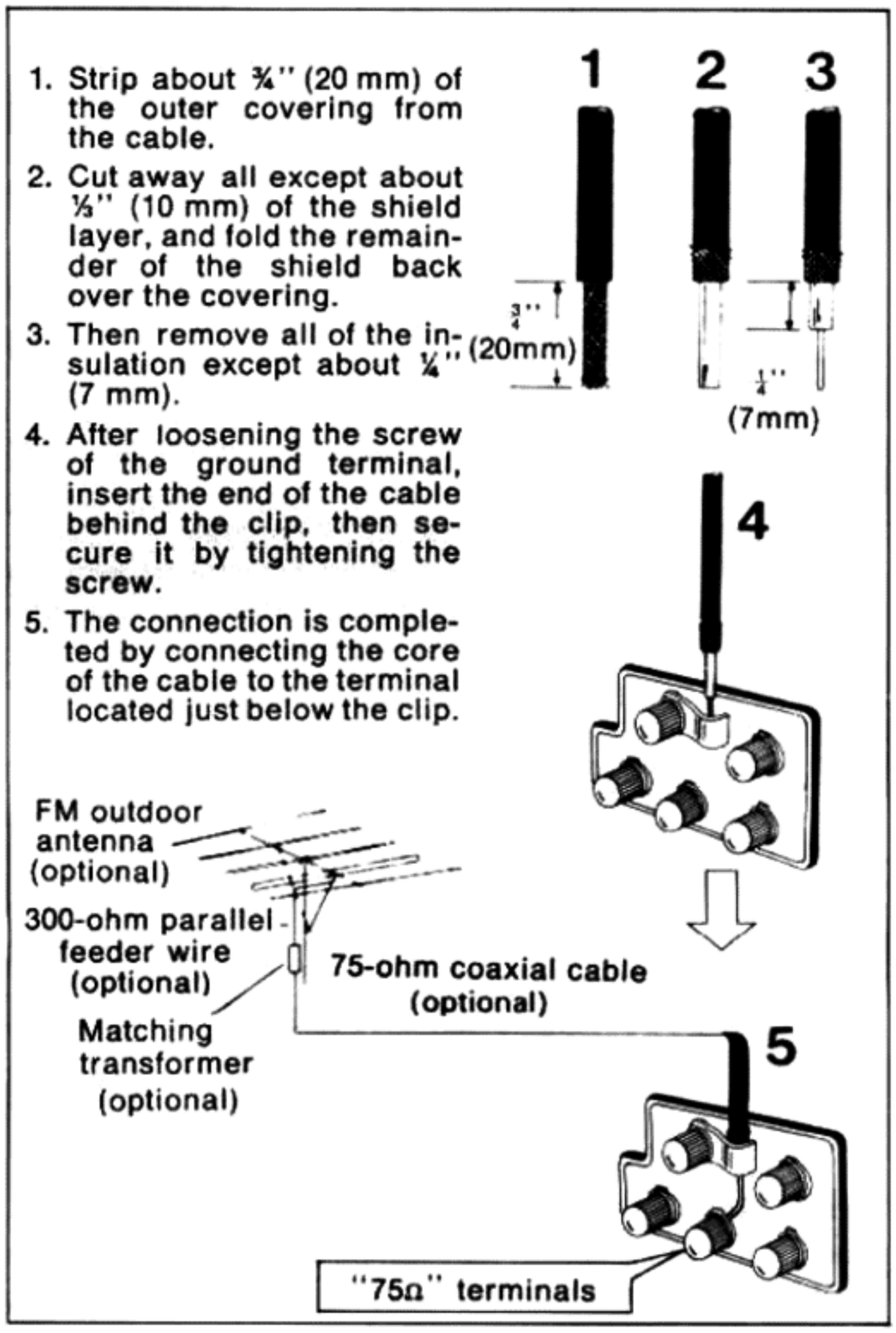


Note, however, that most multi-element FM antennas which have 5 elements or more include a built-in matching transformer and, therefore, the 75-ohm coaxial cable can be connected directly to the antenna.

## ■ Installation of an antenna exclusively for FM broadcasts

The location of the exclusive antenna for FM broadcasts is a very important factor in the determination of tone quality, and even the best antenna will not perform satisfactorily if it is installed in a poor location.

Carefully consider, therefore, the following information before deciding upon the location of the antenna.

1. It should be located in a place which is in the direct path of the FM broadcast signals, and not where the signals will be obstructed by buildings or other obstacles.
2. In order to be free of ignition noise interference from automobiles, etc., it should be located as high above the ground as possible, and should be as far as possible from neon and other electric signs.
3. It should be installed 6 feet (2 m) or more from a metal roof, a concrete building, or from any other antennas, such as for television.

4. FM antennas have a high directional characteristic. In other words, they are much more sensitive to FM signals from one certain direction more than any other direction. The antenna should, therefore, be located so as to face in the direction of best reception.
5. It is usually true that the higher the antenna the better, although, depending upon the place, it may be that a lesser height would be more advantageous. Unless there are special conditions, therefore, a height of 12 feet (4 m) or more above the ground is suggested.

### ■ FM broadcast reception

1. Keeping the volume control at the "0" position, press the power pushbutton to the "ON" position.
2. Set the input selector to the "FM" position.
3. Release the tape-monitor pushbuttons to the "SOURCE" position.
4. Release the FM muting/mode pushbutton to the "ON/FM AUTO" position.
5. Tune the receiver to the desired FM signal.
   After roughly locating the desired FM station with the signal-strength meter, pinpoint the position of least distortion with the FM center-tuning meter.
   The stereo indicator illuminates whenever the receiver is tuned to a stereo broadcast.
6. After pinpointing the desired station, increase the volume to the most comfortable listening level.
7. Make other adjustments in accordance with your taste and the acoustics of the room.

## CONNECTION AND USE OF AN AM ANTENNA

This unit includes a highly sensitive ferrite-bar antenna for reception of AM broadcasts and, therefore, there should be no necessity for connection of an outside antenna except in an area where signals are especially weak.

### ■ AM outdoor antenna

In weak signal areas, far from broadcasting stations, or in a reinforced-concrete building, the highly-sensitive built-in ferrite-bar antenna alone may fail to provide good AM reception. If so, connect a length of vinyl-covered wire to the AM antenna terminal (labeled "AM ANT," on the rear panel).

Then place this antenna outdoors a short distance away from the building. Because the sensitivity of an outdoor antenna varies greatly with its position, someone should listen for the strongest signals as the antenna is oriented. For safety reasons, the antenna should include a lightning arrester.

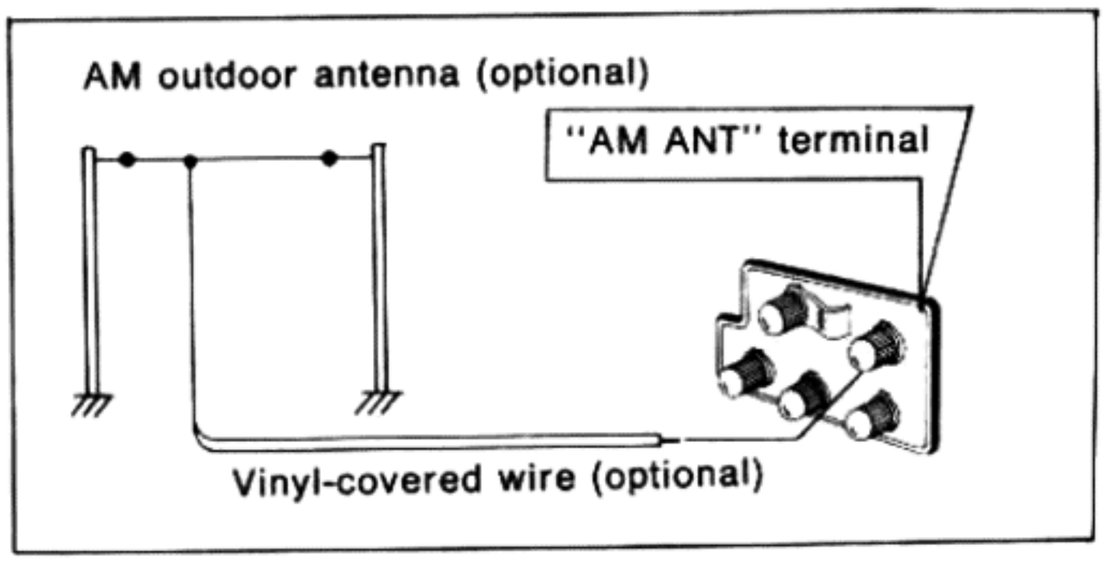


### ■ AM broadcast reception

1. Set the input selector to the "AM" position.
2. Release the tape-monitor pushbuttons to the "SOURCE" position.
3. Tune the receiver to the desired AM signal.
   When the best tuning has been located, the needle of the signal-strength meter will be farthest to the right.
4. After tuning to the desired station, increase the volume to the most comfortable listening level.
5. Make other adjustments in accordance with your taste and the acoustics of the room.

## RECORD PLAYER CONNECTIONS AND OPERATION

### ■ Connections

Connect the record player to the "PHONO" terminals, being careful to connect the left and right connection wires correctly.

If the record player has a ground wire, connect it to the ground ("GND") terminal.

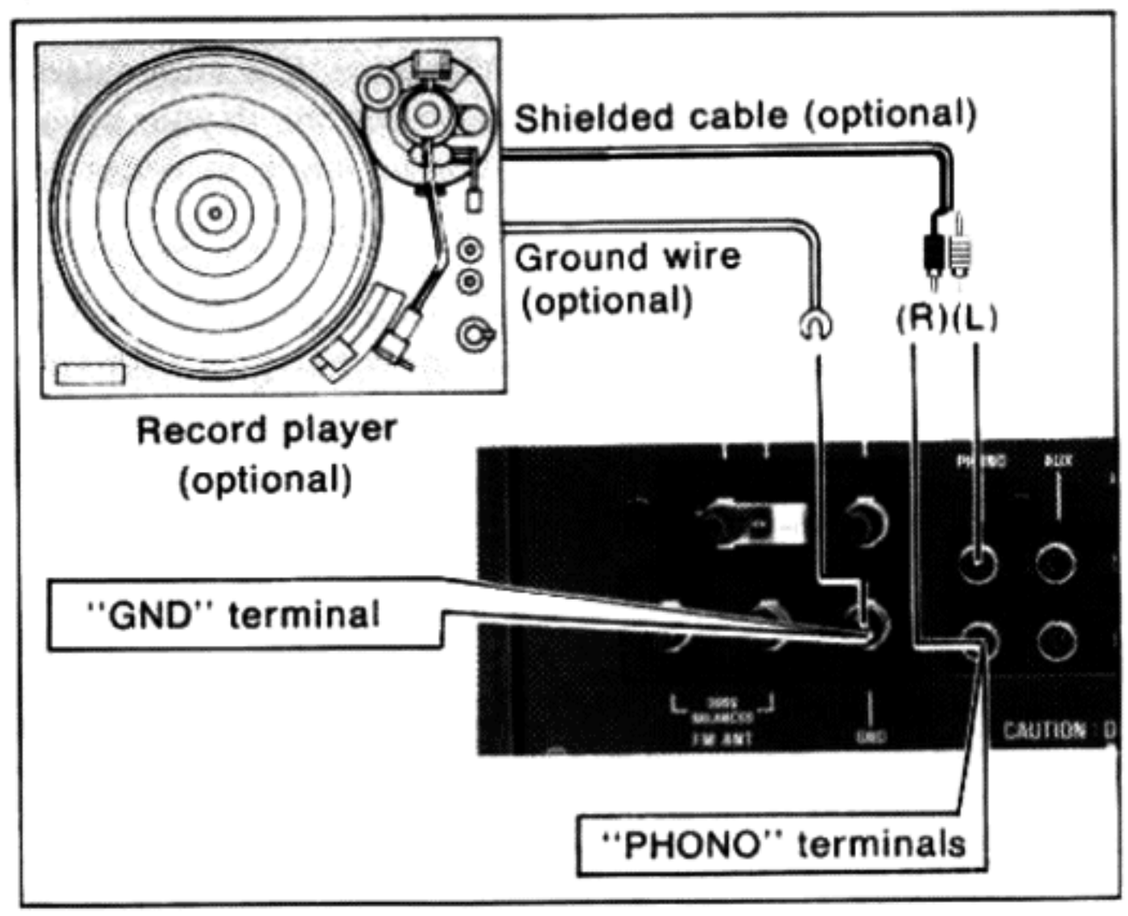


### ■ Cartridge

Use a magnetic cartridge [moving-magnet type (MM), induced-magnet type (IM), or high-output moving-coil type (MC)] with an output of 2mV~10mV (50mm/sec).

If a low-output moving-coil type is used, it cannot be connected directly to the phono terminals; a booster transformer or head-amplifier must be used.

### ■ Disc performance

1. Set the input selector to the "PHONO" position.
2. Release the tape-monitor pushbuttons to the "SOURCE" position.
3. Switch the turntable on and select the proper playing speed.
4. Place the tone arm on the record and increase the volume gradually to the most comfortable listening level.
5. Make other adjustments in accordance with your taste and the acoustics of the room.

## CONNECTIONS TO THE AUXILIARY INPUT TERMINALS AND OPERATION

These terminals are for connection with the output terminals of a tape deck or 8-track stereo, a semiconductor cartridge with head amplifier, etc.

### ■ Reproduction

1. Set the input selector to the "AUX" position.
2. Release the tape-monitor pushbuttons to the "SOURCE" position.
3. Sound will be heard by operating the sound source and turning the volume control clockwise.

## TAPE DECK CONNECTIONS, RECORDING AND PLAYBACK

You can connect 2 separate tape decks directly to this unit. The electronic characteristics of both tape deck terminals (1 and 2) are identical. Not only can this unit be used for recording to two tape decks at the same time, but tape "dubbing" (recording from one tape deck to another) is also possible.

### ■ Connections

Connect the playback terminals of this unit with the output terminals ("LINE OUT") of the tape deck.
Connect the recording output terminals of this unit with the input terminals ("LINE IN") of the tape deck.

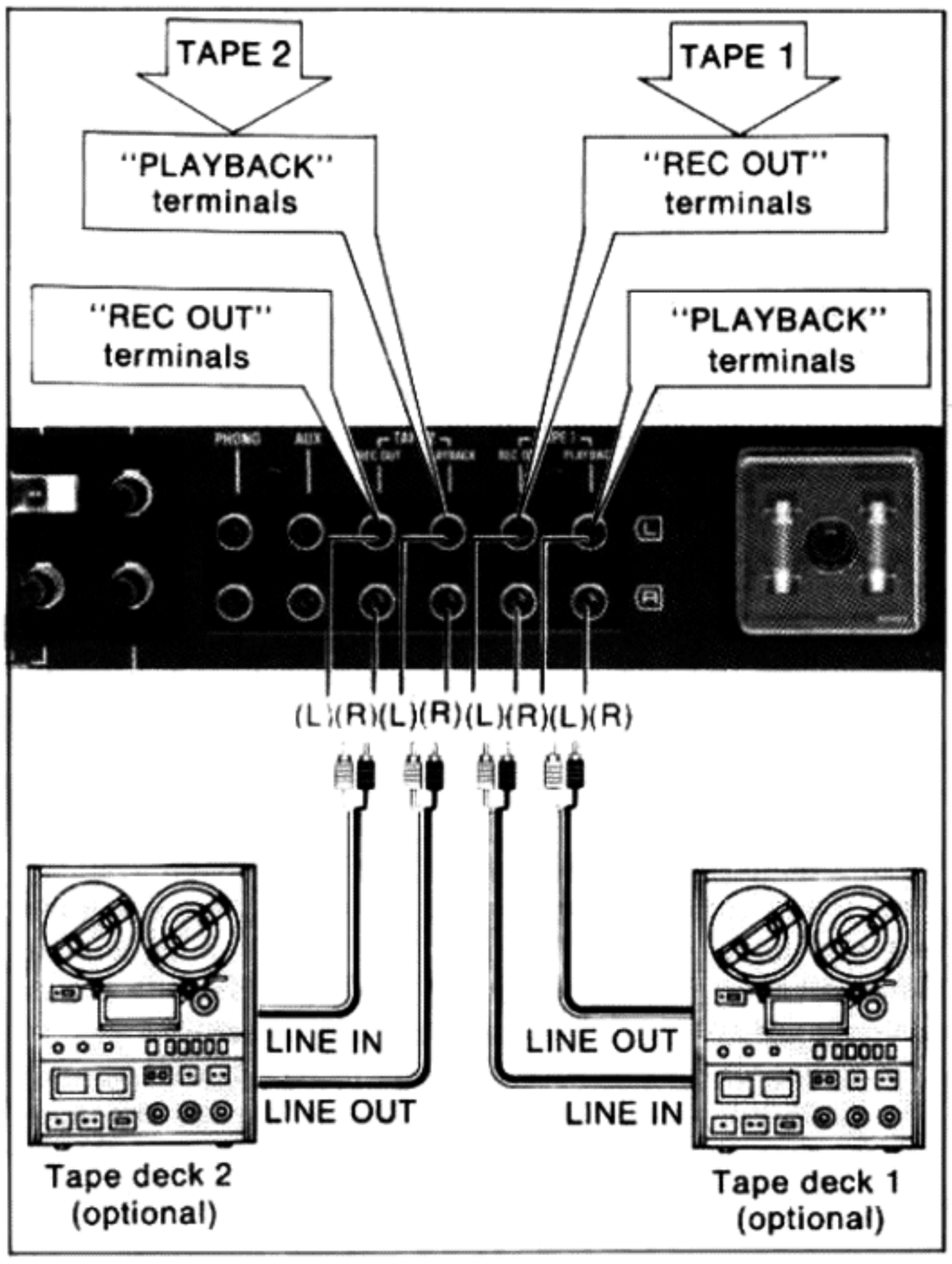


### ■ Recording/playback terminal

This is called the DIN connector,and is a terminal combining the functions of playback and recording. Recording and playback are possible by simply connecting one DIN cord.

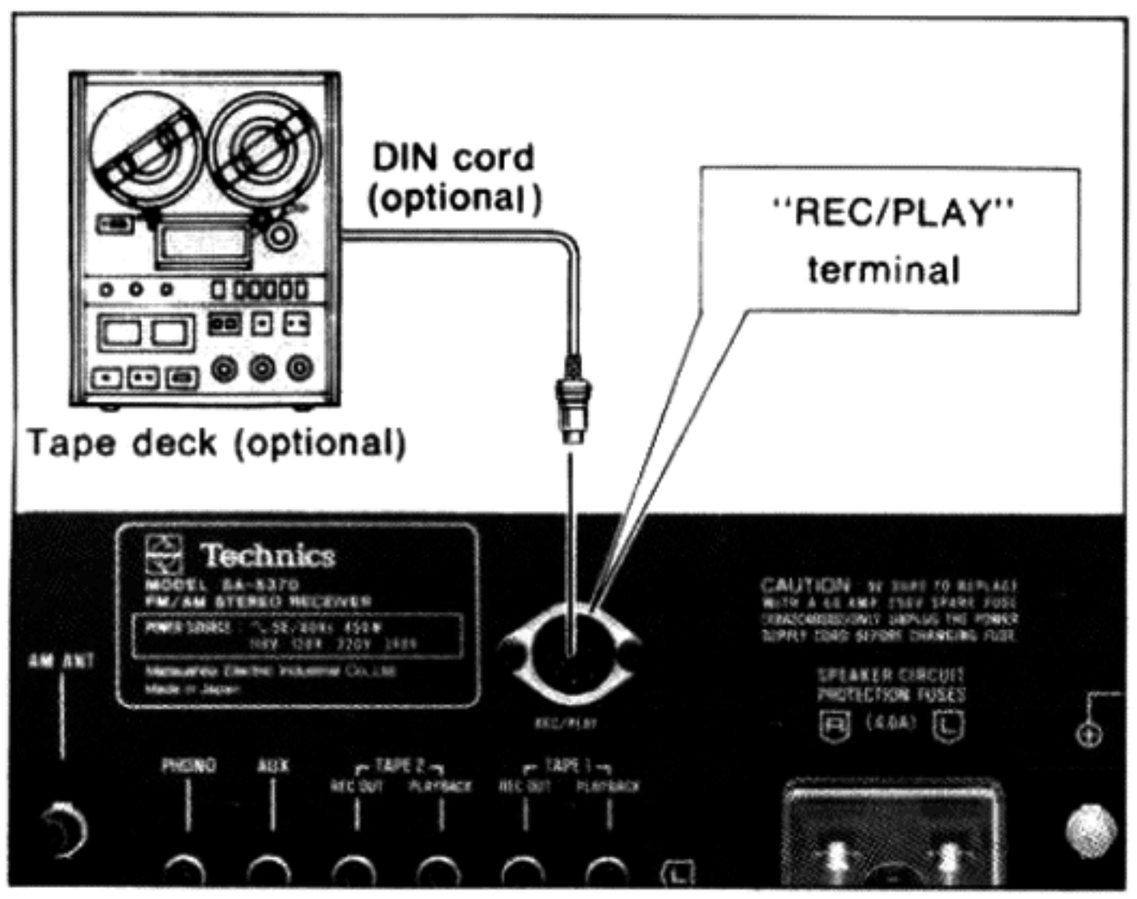


### ■ Playback from a tape deck

1. Select the tape deck with the tape-monitor pushbuttons.
   For playback from tape deck 1, press the tape–1 pushbutton to the "TAPE 1" position.
   For playback from tape deck 2, press the tape–2 pushbutton to the "TAPE 2" position.
   For playback from tape deck 1, release the tape–2 pushbutton to the "SOURCE" position.
2. After preparing the tape deck for playback, increase the volume gradually to the most comfortable listening level.
3. Make other adjustments in accordance with your taste and the acoustics of the room.
   * This unit is designed for use with two tape decks, but it has a special circuit which allows tape deck 2 to take priority.
     In other words, only tape deck 2 is heard if the tape–1 and tape–2 pushbuttons are respectively, in the "TAPE 1" and "TAPE 2" positions at the same time.

### ■ Recording with a tape deck

The signal selected by the input selector is emitted from the "REC OUT" terminals ("TAPE 1" and "TAPE 2") as the signal for recording.
In this instance, all operating controls, such as the volume control and the tone controls, have no effect upon the recording.

1. Set the input selector according to the program source which is to be recorded (FM, AM, PHONO, AUX).
2. Prepare the tape deck for recording.
   The program which has been selected with the input selector is then recorded onto the tape.
3. Be sure to adjust the recording level of the tape deck.
4. Recording check
   A. When using tape deck 1.
      Use the tape–1 pushbutton.
      If this pushbutton is released to the "SOURCE" position, the sound before recording can be heard from the speakers; if it is pressed to the "TAPE 1" position, the sound which has just been recorded is heard from the speakers.
      When using tape deck 1, be sure to release the tape–2 pushbutton to the "SOURCE" position.
   B. When using tape deck 2
      Use the tape–2 pushbutton.
      If this pushbutton is released to the "SOURCE" position, the sound before recording can be heard from the speakers; if it is pressed to the "TAPE 2" position, the sound which has just been recorded is heard from the speakers.
      When using tape deck 2, be sure to release the tape–1 pushbutton to the "SOURCE" position.
   C. To record to two tape decks at the same time.
      Note that, when recording to 2 tape decks at the same time, the recording made by tape deck 1 cannot be monitored during the recording.

### ■ To record from tape deck 1 to tape deck 2

1. Press the tape-1 pushbutton to the "TAPE 1" position.
2. Prepare tape deck 1 for playback and tape deck 2 for recording.
   It is now possible to record the program of tape deck 1 onto tape deck 2. In this case, all other controls will have no effect on the recording.
3. Check the recording condition by using the tape-2 pushbutton.
   If this pushbutton is released to the "SOURCE" position, the sound from tape deck 1 will be heard; if it is set to the "TAPE 2" position, the sound from tape deck 2 will be heard.

**NOTE: This unit cannot be used for recording from tape deck 2 to tape deck 1.**

# CONNECTIONS AND OPERATION (continued)

## CONNECTION AND USE OF HEADPHONES

### Connection

Connect the headphones to the headphones jack at the left of the front panel. Use headphones with a voice-coil impedance of 4 to 16 ohms.

### Operation

A signal is constantly supplied to the headphones jack regardless of the on/off setting of the speaker selection pushbuttons. When listening only by headphones, set the speaker selection pushbuttons to the "OFF" position.

## GROUND TERMINAL

This terminal is connected with the ground wire of the record player and tape decks. When grounding, use vinyl-covered wire and add a copper strap to the end of the wire, which should either be buried or connected to a water pipe for efficient grounding.
Absolutely never attempt to connect this wire to a gas pipe.

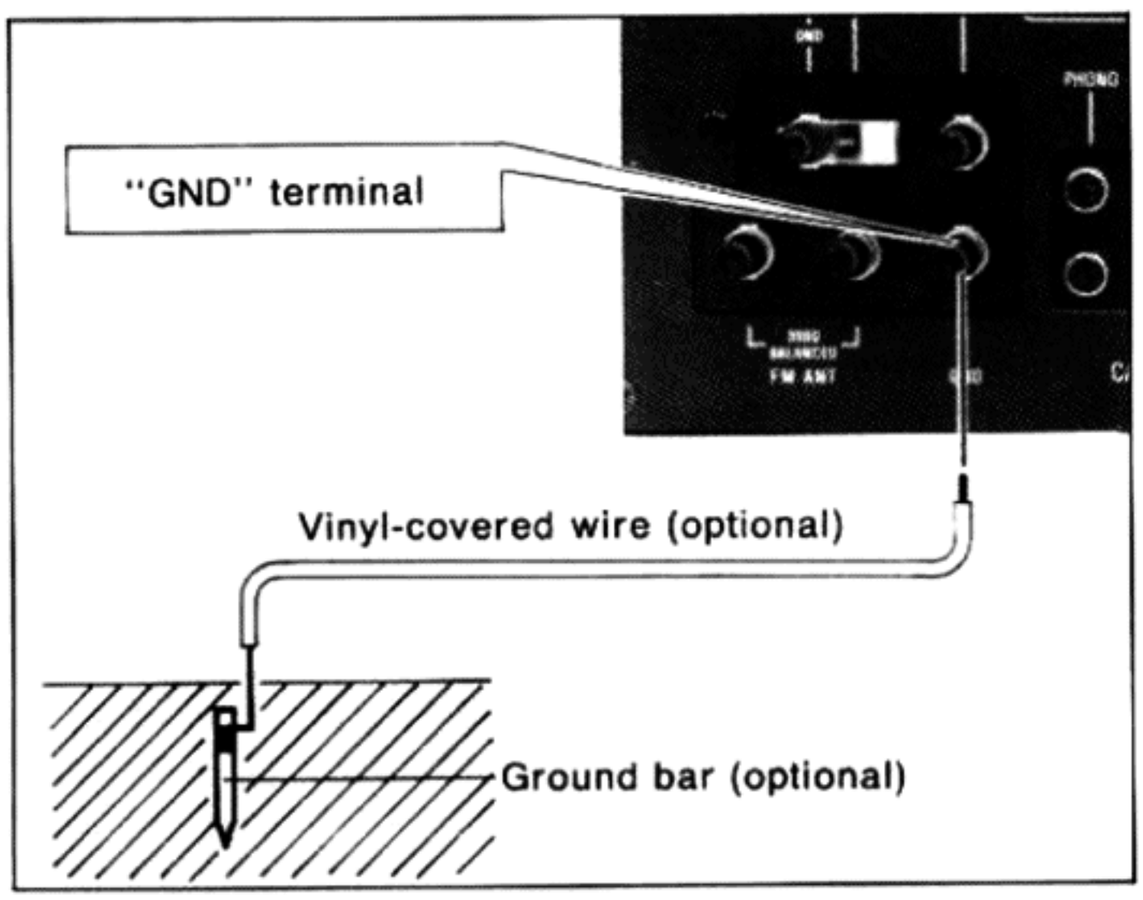


# OPERATION CAUTIONS

### Connection wires

Wires used to connect this unit to other stereo equipment, such as a record player or a tape deck, should be high-quality shielded wire with low electrostatic capacity, and should, moreover, be thick wire and no longer than necessary. Use of this type of wire will minimize the incidence of induction of unwanted noise or hum, and will avoid loss of high-frequency characteristics. Especially note that, the longer the wire, the larger the decrease of high-frequency characteristics. Be sure that the wire is no longer than necessary for best results.

### Connection caution

Be sure that the connections to the speakers and the input sources are securely made. If the connections are not secure, the receiver will not operate normally and may produce noise.

### Cautions concerning operating and changing connections

After switching on the power, do not attempt to use the controls for a few moments. The output of this unit is large, and, if excessive input is applied, damage to the speakers may result.
For this reason, be sure to decrease the volume before making connections or disconnections of the input terminals.

### Reproduction cautions

If unwanted noise such as hum or "howling" occurs while listening to a disc or tape, and the receiver is operating correctly, the noise may be caused by one or more of the following:

1. If the record player is placed directly on or near a speaker, the sound vibration from the speaker may be transmitted, causing "howling."
   Move the record player from the speakers or place a flat cushion under the record player, so that the vibration is not transmitted to the player.
2. Hum might be caused if the shield and center core of the connection wire are connected in reverse, or if the motor is not properly grounded.

### Circuit protection fuses

If no sound is heard from one or more speakers when the unit has been installed correctly and the tuning dial is illuminated, turn off the power and check to see if a circuit protection fuse (on the rear panel) has failed.
If a circuit protection fuse has failed, replace it (fuse number XBA2C40SS0) after determining the cause of the fuse failure (such as a "shorted" speaker wire) and correcting it.
Do not use any fuse except the one included, or fuse number XBA2C40SS0.

# HOW TO USE PIN PLUGS

Use the furnished pin plug when the connection terminal (pin jack) of this unit is different in shape from the connecting cord of the set to be connected to this unit.

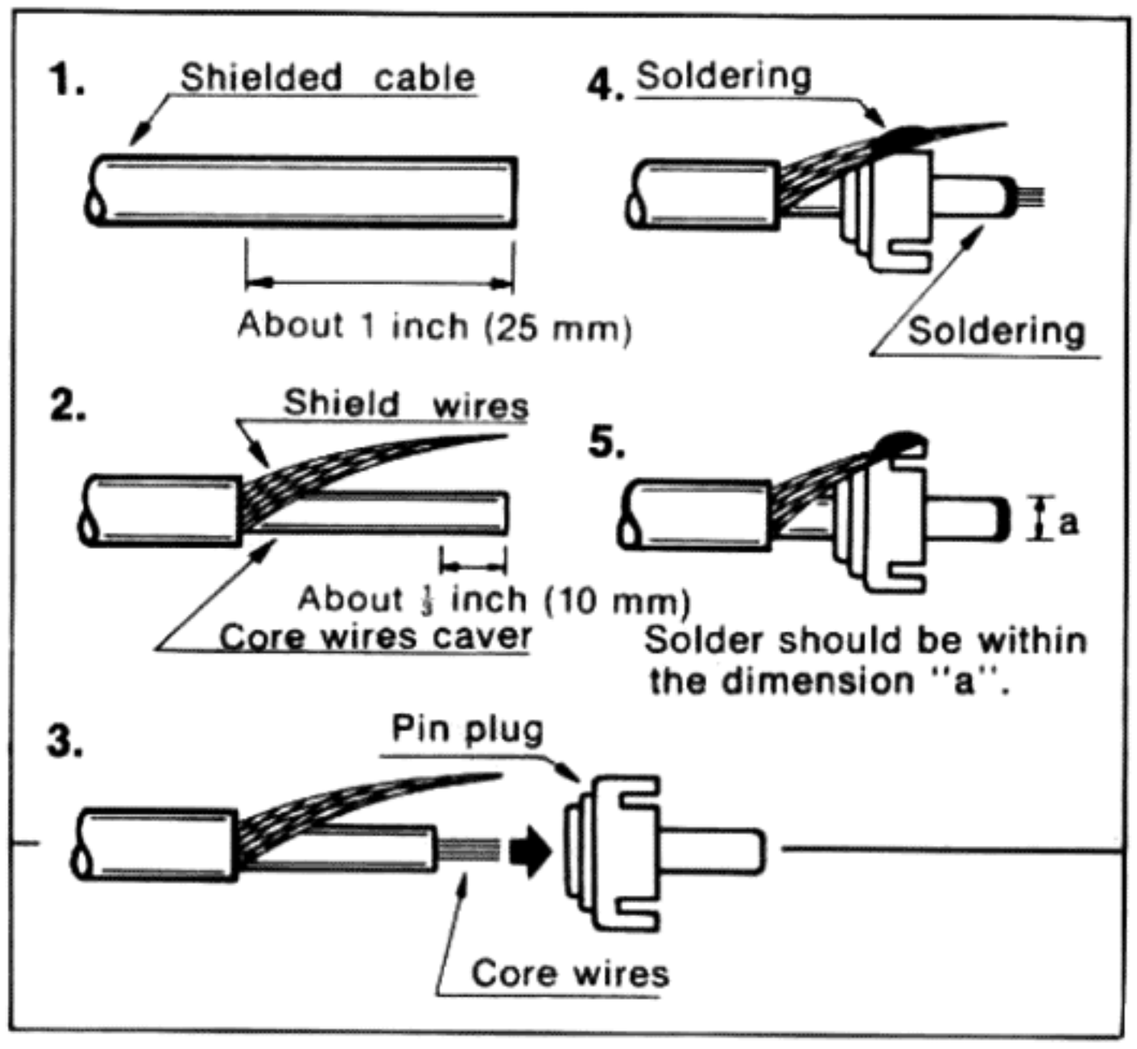


# HOW TO CARE FOR THE CABINET

- If this unit becomes dirty, it can be cleaned by wiping it with a soft, dry cloth. If it is extremely dirty, dip the soft cloth into a soap-and-water solution, wring the cloth out well and then wipe the unit clean. After cleaning, wipe the unit dry once more with a dry cloth.
- Be careful not to allow alcohol, thinner, benzine, insecticide and other similar chemicals to get on the surface of this unit because they may damage its finish by causing the finish to peel off or lose its luster.
- Never use a wet cloth or a chemically-treated cloth for cleaning.

# ACCESSORIES

FM feeder antenna ..... 1
Circuit protection fuses ..... 2
Pin plugs ..... 4

# FOR LONGER AND SAFER USE OF THIS UNIT

In order to receive the best service from this unit, and for safest operation, carefully read the following information.

## 1. THE POWER SOURCE:

**It's very dangerous to use this unit at a voltage which is different than the rated voltage**

- There is the danger of combustion if the unit is connected to a power source which is different than the rated voltage.
  Be very careful concerning this point.

**Direct current cannot be used.**

- There are some places, such as ships, where direct current is used as the power source. Before connecting this unit, confirm the power source.

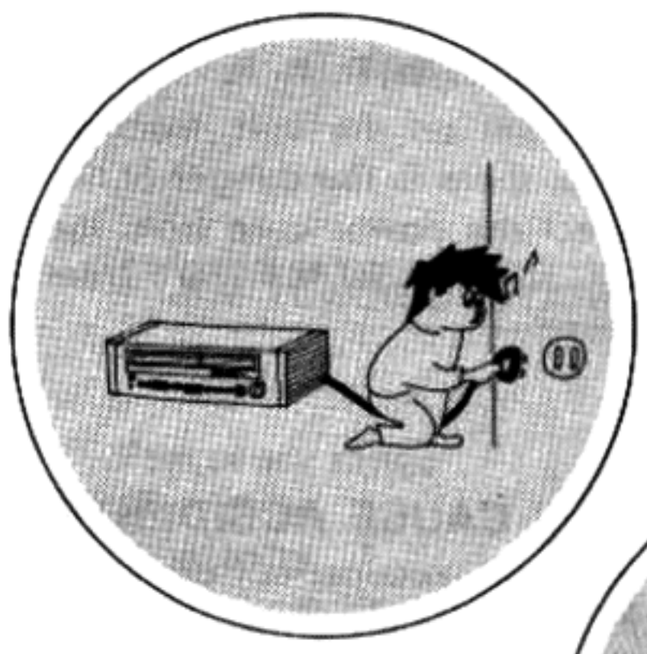

1

## 2. CONNECTION OF THE POWER CORD:

**Wet hands are dangerous**

- Be sure to never touch the power cord with wet hands because there is the danger of electric shock. This is true, of course, of all electric equipment.

**Don't pull the power cord**

- Never pull the power cord to disconnect it. Always pull the plug of the cord only.

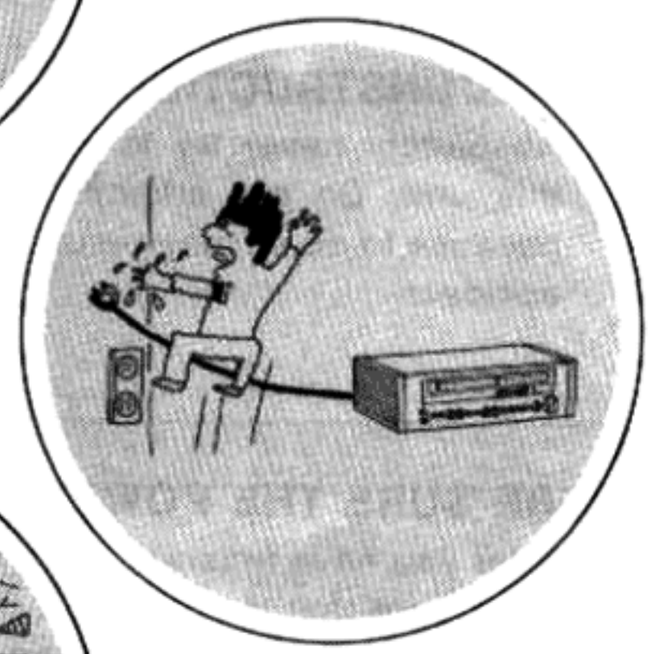

2

## 3. LOCATION OF THE UNIT:

- A place which is not in direct sunlight.
- Select a place which will assure good ventilation: at least 4 inches (10cm) from walls and other surfaces, and where curtains or other similar material will not obstruct the ventilation holes on its upper surface.

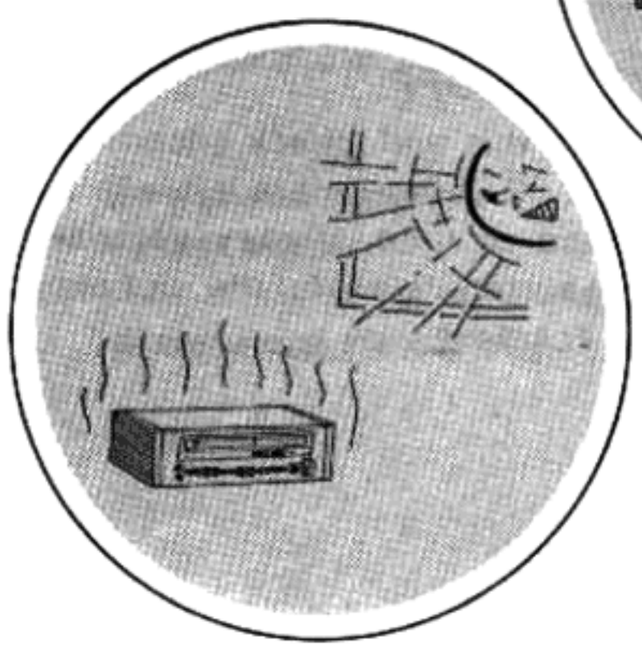

3

**4. NEVER PLACE HEATING EQUIPMENT NEARBY**

Be sure to keep stoves and other sources of heat away from this unit, because heat radiated by such equipment may cause deformation of plastic parts of this unit or damage its cabinet, or, at worst, might cause a fire.

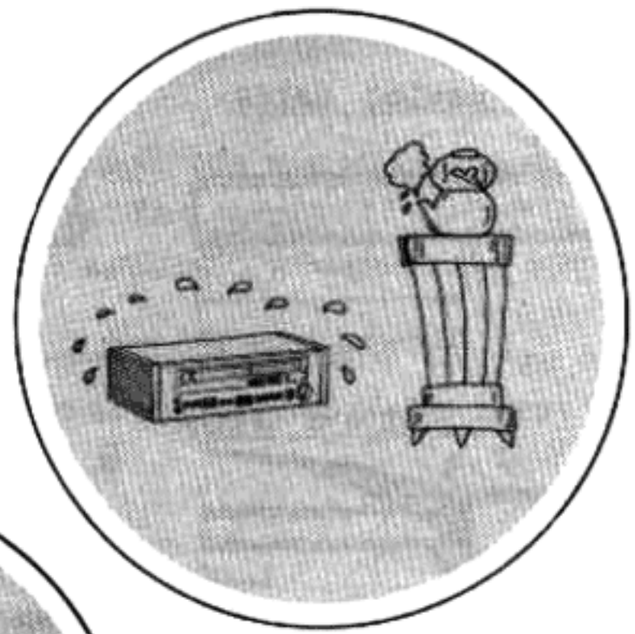

4

**5. KEEP INSECTICIDE AWAY**

- If insecticide is sprayed on the cabinet or plastic parts of this unit, "cracks" or "cloudiness" of the material may occur.
- In addition, note that such sprays may be the cause of fire, so great care should be taken.

5

**6. ESPECIALLY FOR FAMILIES WITH CHILDREN**

**Take care that no small items, such as metal articles, are put inside this unit**

- In addition, children should be especially warned not to put anything into the ventilation holes, such as toys or a screwdriver, because these things may cause an electric shock or result in a malfunction of the unit.

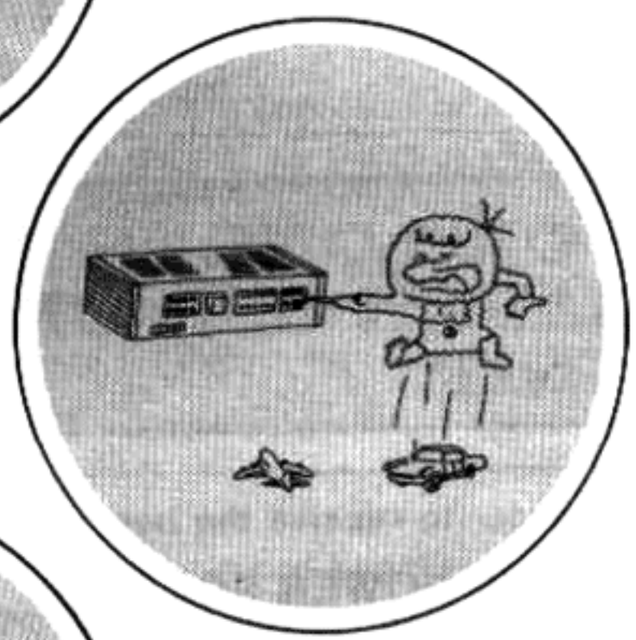

6

**7. IF WATER SPILLS ON THE UNIT**

If water should happen to spill on the unit, from an overturned vase for example, there is the danger of fire or electric shock. Disconnect the power cord from the electric outlet immediately, and contact the store from which the unit was purchased.

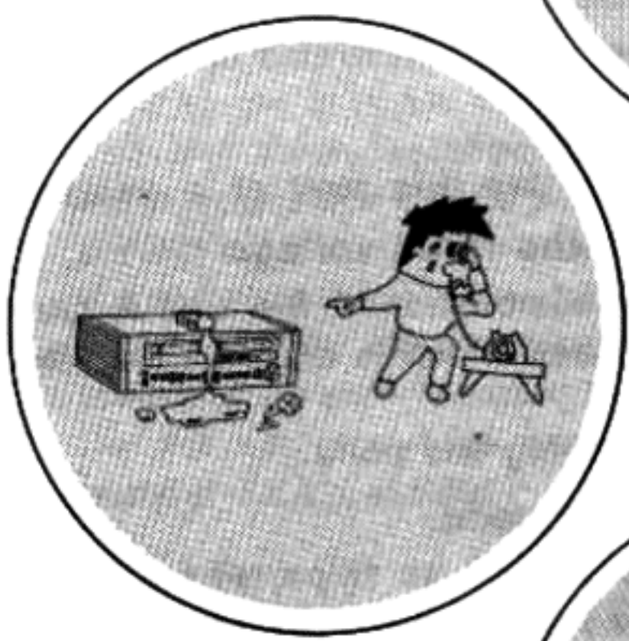

7

**8. RECONSTRUCTION CAN CAUSE ACCIDENTS**

Absolutely never try to remodel, reconstruct or repair this unit. Do not attempt to touch any internal parts because to do so may result in an electric shock or other accident.

8

**9. BE SURE THE POWER IS OFF**

After you have finished using this unit, check once more to be sure that the power is off. If the unit is left with its power on for a long period of time, it may not only damage the unit and thus shorten its useful life, but may also lead to a dangerous accident.

9

# TECHNICAL SPECIFICATIONS

**(DIN 45 500)**

## AMPLIFIER SECTION

| | | |
|---|---|---|
| **1 kHz continuous power** | | |
| **both channels driven** | | 2×64W (4Ω) |
| | | 2×53W (8Ω) |
| **20 Hz~20 kHz continuous power** | | |
| **both channels driven** | | 2×56W (4Ω) |
| | | 2×48W (8Ω) |
| **40 Hz~16 kHz continuous power** | | |
| **both channels driven** | | 2×56W (4Ω) |
| | | 2×48W (8Ω) |
| **Power bandwidth** | | |
| **both channels driven at 4Ω** | | 7 Hz~50 kHz, −3 dB |
| **both channels driven at 8Ω** | | 7 Hz~50 kHz, −3 dB |
| **Total harmonic distortion** | | |
| **rated power at 1 kHz** | | 0.1% (4Ω, 8Ω) |
| **reted power at 20 Hz~20 kHz** | | 0.1% (4Ω, 8Ω) |
| **rated power at 40 Hz~16000 Hz** | | 0.1% (4Ω, 8Ω) |
| **−26 dB rated power at 1 kHz** | | 0.15% (4Ω) |
| **50mW power at 1 kHz** | | 0.18% (4Ω) |
| **Intermodulation distortion** | | |
| **rated power at 250 Hz: 8000 Hz, =4:1, 4Ω** | | 0.1% |
| **rated power ar 60 Hz: 7 kHz=4:1,8Ω** | | 0.1% |
| **Damping factor** | | 50 (8Ω), 25 (4Ω) |
| **Input sensitivity and impedance** | | |
| **PHONO** | | 2.5mV/47kΩ |
| **AUX** | | 150mV/33kΩ |
| **TAPE 2 PLAYBACK** | | 150mV/33kΩ |
| **TAPE 1 PLAYBACK, REC/PLAY input** | | 180mV/39kΩ |
| **PHONO maximum input voltage (1 kHz, RMS)** | | 150mV |
| **S/N** | | |
| **rated power** | **PHONO** | 65 dB (IHF, A: 78 dB) |
| | **AUX** | 80 dB (IHF, A: 95 dB) |
| **−26 dB rated power** | **PHONO** | 55 dB |
| | **AUX** | 55 dB |
| **50mW power output** | **PHONO** | 55 dB |
| | **AUX** | 55 dB |
| **Frequency response** | | |
| **PHONO** | | RIAA standard curve ±0.2 dB |
| **AUX** | | 20 Hz~20 kHz, ±0.5 dB |
| | | 10 Hz~45 kHz, −1 dB |
| **Tone controls** | | |
| **BASS** | | 50 Hz, +10 dB~ −10 dB |
| **TREBLE** | | 10 kHz, +10 dB~ −10 dB |
| **Loudness control (volume at −30 dB)** | | 50 Hz, +10 dB |
| **Low filter** | | 100 Hz, −6 dB/oct. |
| **High filter** | | 7 kHz, −6 dB/oct. |
| **Output voltage** | | |
| **TAPE 1 REC OUT** | | 150mV |
| **TAPE 2 REC OUT** | | 150mV |
| **TAPE 1 REC/PLAY output** | | 30mV |
| **Channel balance** | | ±2.0 dB |
| **Channel separation** | | 55 dB |
| **Headphones level and output impedance** | | 450mV/330Ω |
| **Load impedance** | | |
| **MAIN or REMOTE** | | 4~16Ω |
| **MAIN+REMOTE** | | 8~16Ω |

## FM TUNER SECTION

| | |
|---|---|
| **Frequency range** | 88~108 MHz |
| **Antenna terminals** | 300Ω (balanced) |
| | 75Ω (unbalanced) |
| **Sensitivity (±40 kHz deviation)** | 1.9μV (IHF, usable) |
| | 20μV (IHF, S/N 46 dB, 75Ω, STEREO) |
| | 1.9μV (S/N 30 dB, 300Ω) |
| | 1.7μV (S/N 26 dB, 300Ω) |
| | 1.5μV (S/N 20 dB, 300Ω) |
| | 1.3μV (S/N 30 dB, 75Ω) |
| | 1.2μV (S/N 26 dB, 75Ω) |
| | 0.9μV (S/N 20 dB, 75Ω) |
| **Total harmonic distortion** | |
| **MONO** | 0.15% |
| **STEREO** | 0.3% |
| **S/N (±40 kHz deviation)** | |
| **MONO** | 58 dB (IHF, 75 dB) |
| **STEREO** | 55 dB (IHF, 70 dB) |
| **Frequency response** | 20 Hz~15 kHz, $^{+0.5}_{-1.5}$ dB |
| **Selectivity** | 70 dB |
| **Capture ratio** | 1.5 dB |
| **Image rejection at 98 MHz** | 65 dB |
| **IF rejection at 98 MHz** | 80 dB |
| **Spurious response rejection at 98 MHz** | 80 dB |
| **AM suppression** | 55 dB |
| **Stereo separation** | |
| **1 kHz** | 45 dB |
| **10 kHz** | 35 dB |
| **Leak carrier** | |
| **19 kHz** | −35 dB |
| **38 kHz** | −45 dB |
| **Channel balance (250 Hz~6300 Hz)** | ±1.5 dB |
| **Limiting point** | 1.2μV |
| **Bandwidth** | |
| **IF amplifier** | 250 kHz |
| **FM demodulator** | 1000 kHz |

## AM TUNER SECTION

| | |
|---|---|
| **Frequency range** | 525~1605 kHz |
| **Sensitivity** | 30μV, 300μV/m |
| **Selectivity** | 30 dB |
| **Image rejection at 1000 kHz** | 45 dB |
| **IF rejection at 1000 kHz** | 40 dB |

## GENERAL

| | |
|---|---|
| **Power consumption** | 450W |
| **Power supply** | 50 Hz/60 Hz, 110V/120V/220V/240V |
| | 50 Hz/60 Hz, 220V/240V (for United Kingdom) |
| **Dimensions (W×H×D)** | 450×142×330 mm |
| | $17\frac{23}{32}$"×$5\frac{19}{32}$"×13" |
| **Weight** | 10.5 kg (23.1 lb.) |

# Schematic Diagram ..... Model SA-5370/SA-5370K

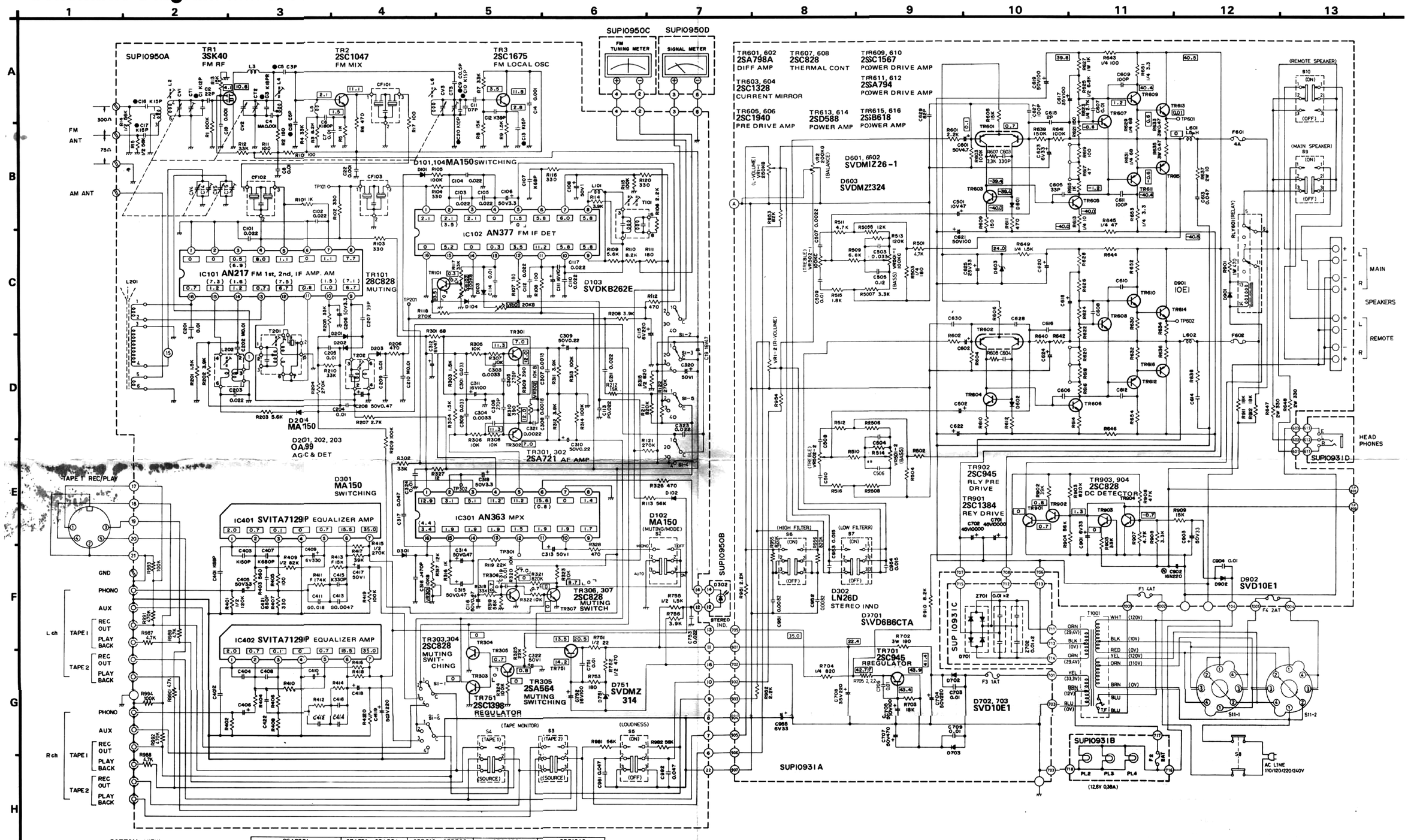


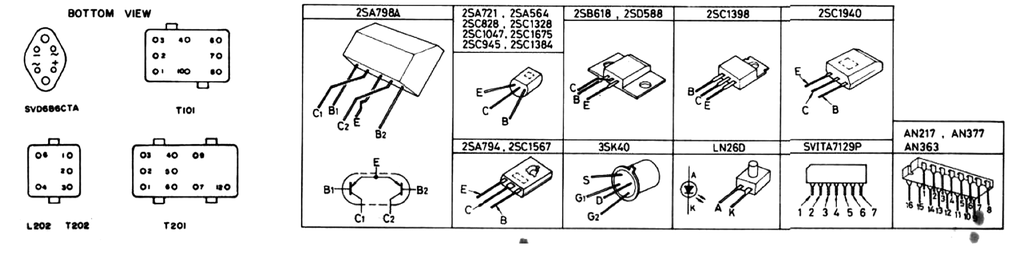


NOTES:

1. S1-1 – S1-6: Selector switch in "AM" position
   ① AM←→② FM←→③ PHONO←→④ AUX
2. S2: FM muting/FM mode switch in "ON/FM AUTO" position"
3. S3: Tape monitor 2 switch in "SOURCE" position.
4. S4: Tape monitor 1 switch in "SOURCE" position.
5. S5: Loudness switch in "OFF" position.
6. S6: High-filter switch in "OFF" position.
7. S7: Low-filter switch in "OFF" position.
8. S8: Power source switch in "ON" position.
9. S9: Main speaker switch in "ON" position.
10. S10: Remote speaker switch in "OFF" position.
11. S11-1, S11-2: Voltage selector switch in "120V" position.
    ① 110V←→② 120V←→③ 220V←→④ 240V
12. Indicated voltage values are the standard values for the unit measured by the DC electronic circuit tester (high impedance) with the chassis taken as standard. Therefore, there may exist some errors in the voltage values, depending on the internal impedance of the DC circuit tester.
    ▭ FM monoral signal reception.
    ( ) AM position.
    < > FM stereo signal reception.
    ⌐ ⌙ FM muting circuit operating position.
13. This schematic diagram may be modified at any time with the development of new technology.

Printed in Japan SOY2

## ■ POWER SOURCE OF THE PRODUCTS FOR OTHER DESTINATIONS EXCEPT (XG, XGH, XGF, XSD, XSW)

• Product for [XA]

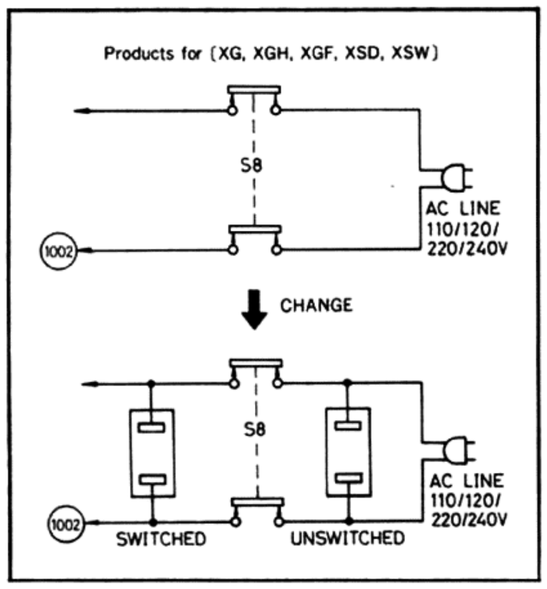


• Product for England [XE]

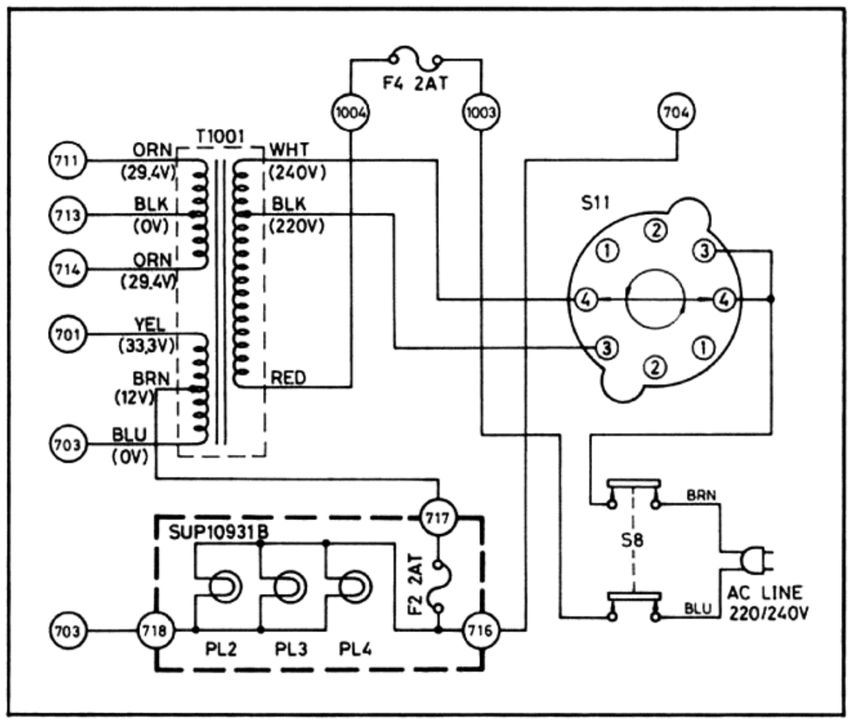


Product for Australia [XAL]

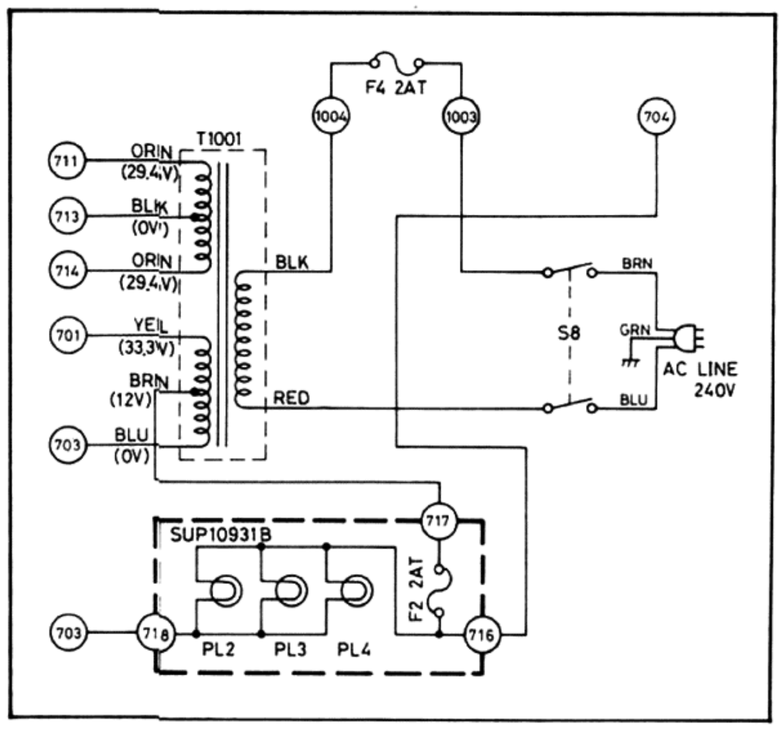


## ■ BLOCK DIAGRAM OF INTEGRATED CIRCUITS

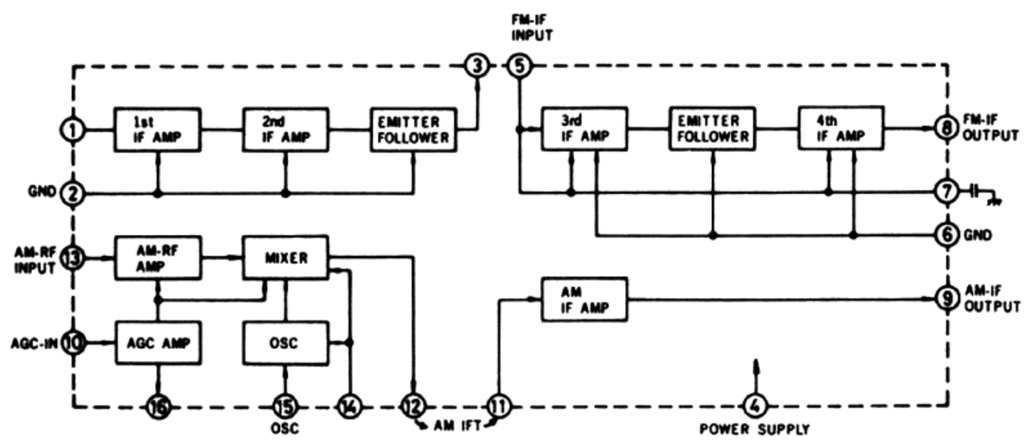


**IC101 (AN217)**
**FM 2 STEPS IF AMPLIFIER & AM CIRCUIT**

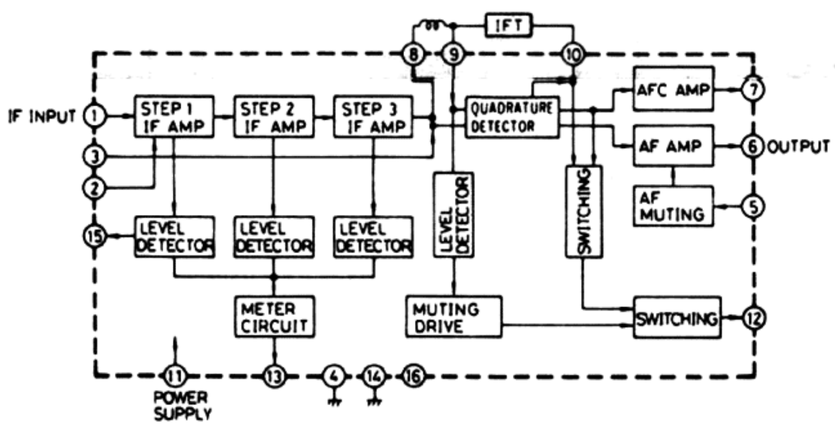


**IC102 (AN377)**
**FM IF AMPLIFIER & DETECTOR CIRCUIT**

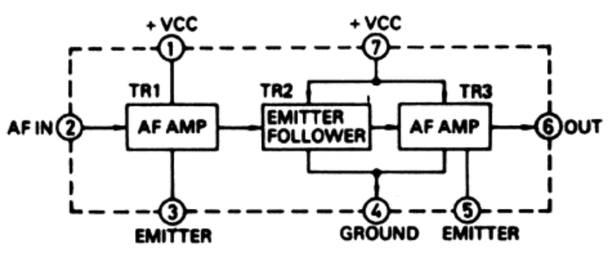


**IC401, 402 (SVITA7129P)**
**EQUALIZER AMPLIFIER CIRCUIT**

## ■ ANTENNA CUPPLING CAPACITORS THE PRODUCTS FOR (XAL) ONLY

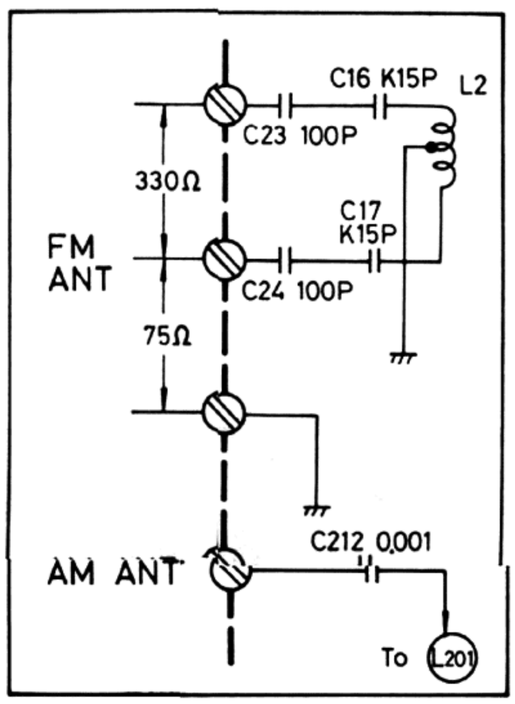


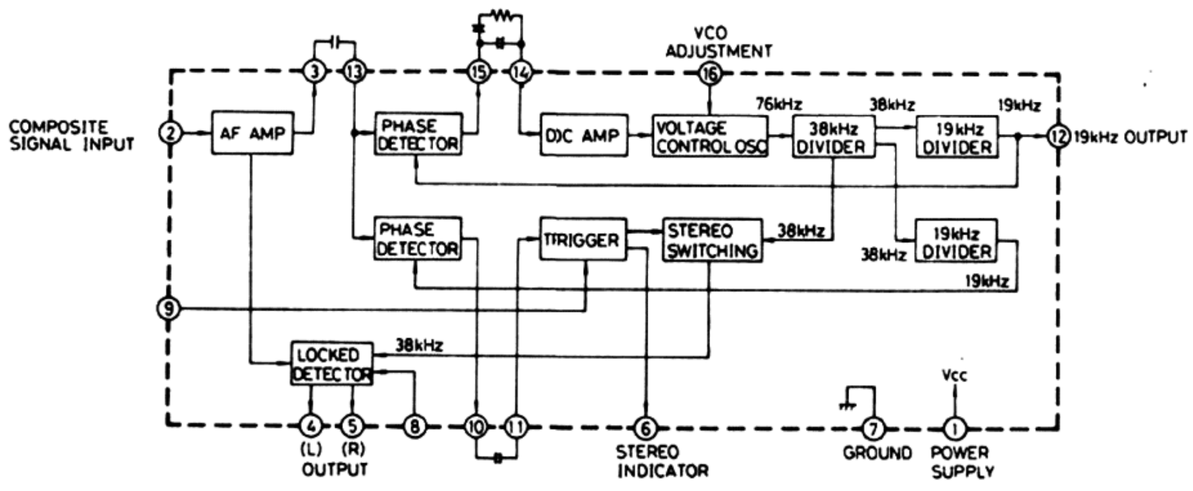


**IC301 (AN363)**
**PLL FM MULTIPLEX CIRCUIT**